TourPro Lighting

AQUABEAM SERIES

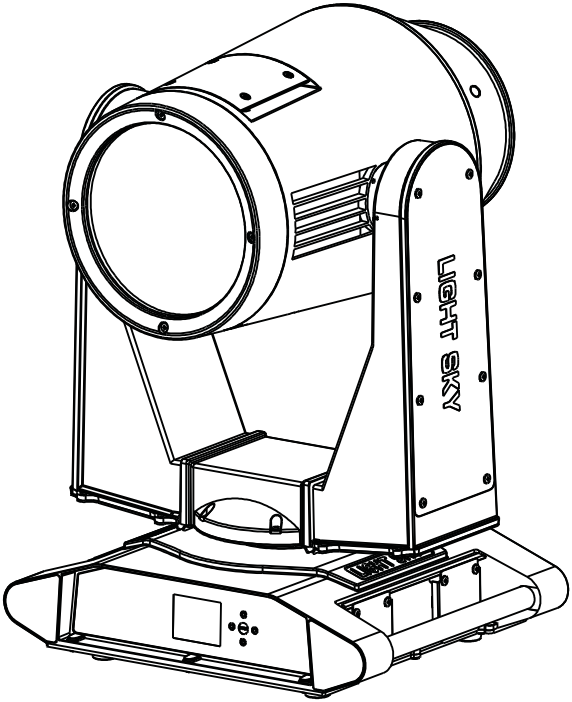

USER MANUAL

Please read these user manual carefully before use

www.tourprolighting.com

Contents

1. Safety information.....2
2.Technical information.....3
3.Attachment and body size 5
4.Installation and connecting.....6
5. Control panel.....7
6. Menu setting.....8
7.Channel function.....10
8.Circuit connecting diagram.....15
9.Cleaning and maintenances.....16
10.Troubeshooting.....16
11. Duty exonerative and copyright protection.....17
12. Company information.....18

Congratulations on choosing our company product! We thank you for your custom.

◆Please note that this product, as all the others in the rich my company range, has been designed and made with total quality to ensure excellent performance and best meet your expectations and requirements.

◆Carefully read this user manual in its entirety and keep it safe for future reference. It is essential to know the information and comply with the instructions given in this manual to ensure the fitting is installed, used and serviced correctly and safely.

◆My company disclaims all liability for damage to the fitting or to other property or persons deriving from installation, use and maintenance that have not been carried out in conformity with this user manual, which must always accompany the fitting.

◆My company reserves the right to modify the characteristics stated in this user manual at any time and without prior notice.

SAFETY INFORMATION

• Installation
Make sure all parts for fixing the projector are in a good state of repair.
Make sure the point of anchorage is stable before positioning the projector.
The safety chain must be properly hooked onto the fitting and secured to the framework, so that, if the primary support system fails,the fitting falls as little as possible.
If the safety chain gets used, it needs to be replaced with a genuine spare.

12m

• MINIMUM DISTANCE OF ILLUM INATED OBJECTS
The projector needs to be positioned so that the objects hit by the beam of light are at least 12 metres from the lens of the projector.

• Minimum distance from flammable materials
The projector must be positloned so that any flammable materials are at least 0.2 metres from every point on the surface of the fitting.

F

• Mounting surfaces
It is permissible to mount the fitting on normally flammable surfaces.

t_a 38℃

• Maximum ambient temperature
Do not operate the fixture if the ambient temperature (Ta) exceeds 38℃.

•Protection against electrical shock
Connection must be made to a power supply system fitted with efficient earthing (**Class I** appliance according to standard EN 60598-1).
It is,moreover, recommended to protect the supply lines of the projectors from indirect contact and/or shorting to earth by using appropriately sized residual current devices.

• Connection to mains supply
Connection to the electricity mains must be carried out by a qualified electrical installer.
Check that the mains frequency and voltage correspond to those for which the projector is designed as given on the electrical data label.
This label also gives the input power to which you need to refer to evaluate the maximum number of fittings to connect to the electricity line, in order to avoid overloading.
Don't use the power cable when the insulation is damaged.
It must be the manufacturer or distributor or the professional person to change the damaged power cable in order to avoid any dangerous.

t_c 100℃

• Temperature of the external surface
The maximum temperature that can be reached on the external surface of the fitting, in a thermally steady state, is 100℃.

• Maintenance
Before starting any maintenance work or cleaning the projector, cut off power from the mains supply.
After switching off, do not remove any parts of the fitting, to avoid getting burnt for at least 30 minutes.
After this time the likelihood of the lamp exploding is virtually nill.
The fitting is designed to hold in any splinters produced by a lamp exploding. The lenses must be mounted and, if visibly Damaged, they have to be replaced with genuine spares.

E

• Lamp
The fitting mounts a high-pressure lamp that needs an external igniter. This igniter is fitted onto the apparatus.
-Carefully read the "operating instructions" provided by the lamp manufacturer.
-Immediately replace the lamp if damaged or deformed by heat.

Pb

• Battery
This product contains a rechargeable lead-acid battery. To preserve the environment, please dispose the battery at the end of its life according to the regulation in force.

CE

The products referred to in this manual conform to the European Community Directives to which they are subject:
•Low Voltage 2006/95/CE
•Electromagnetic Compatibility 2004/108/CE

TECHNICAL INFORMATION

●Power supplies available

AC100-240V/50-60Hz

●Power

IP2000:495W

IP3000:628W

●Lamp(IP2000)

- Brand:SIRIUS HRI 330W OSRAM
- Colour temperature:3200K~7800K
- Average life 1500h

●Lamp(IP3000)

- Brand:SIRIUS HRI 440W S
- Colour temperature:3200K~7800K
- Average life 1200h

●Motors

14PCS mute sound motor.

●Channels

20/24 control channels

●Beam angle

Beam:0-2.1°

DMX 512/WIRELESS DMX 512(Apolegamic)

●Strobe

lens strobe(0.5-20 times/second)

●Dimmer

0-100% linear adjustment

●Prism

3-facet prism+8-facet prism

●Lens

High presision optical lens

●Travel

- PAN = 540°
- TILT = 250°

●Maximum speeds

- PAN = 2.9s/540°
- TILT = 1.5s/250°

●Resolution

- PAN = 2.11°
- PAN FINE = 0.008°
- TILT = 0.98°
- TILT FINE = 0.004°

●IP set

Automatic charging battery,IP could be set without electricity.

●Features

Remote control lamp's switch function, display light and lamp's using time, automaticallay adjust cooling-fan's speed, Drop 60W power when strobe lens.

●IP55 protection rating

- Protected against the entry of solid bodies larger than 12mm.
- Bipolar circuit breaker with thermal protection.
- Automatic break in power supply in case of overheating or failed operation of cooling system.

●Cooling

Forced ventilation with axial fans.

●Structure

Heat-proof plastic+module pressing alloy materials.

●CE Marking

- In conformity with the European Union Low Voltage.
- Directive 2006/95/CE and Electromagnetic compatibility Directive 2004/108/CE.

●Two side handles for transportation.

●Device locking PAN and TILT mechanisms for transportation and maintenance.

●Weights and size

Flycase Size:

2PCS:935x620x800(mm)

N.W.:45.2kg G.W.:90kg

Static wheel(1 white + 12 gobo)
(please refer to the actual material)

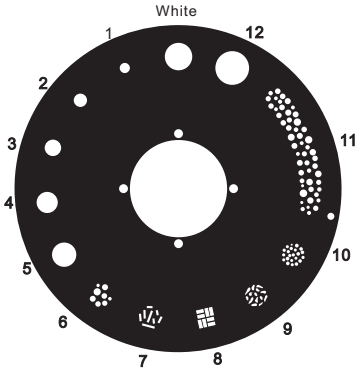

Color Wheel:(please refer to the actual material)

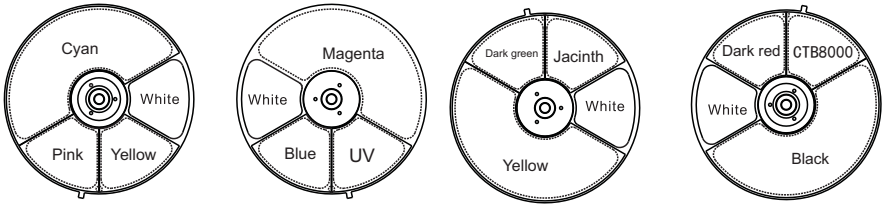

Photometric Data:

IP2000

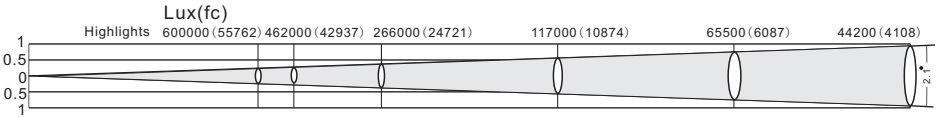

Distance m	13	15	20	30	40	50
Diameter m(ft in)	0.48(1'6")	0.57(1'9")	0.75(2'5")	1.2(4')	1.5(5')	1.87(6')

IP3000

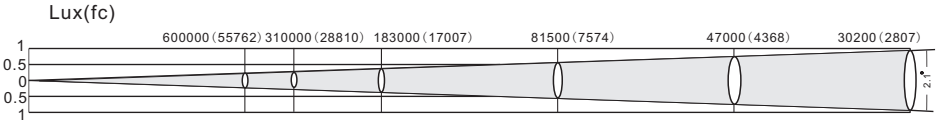

Distance m	12	15	20	30	40	50
Diameter m(ft in)	0.46(1'5")	0.57(1'9")	0.75(2'5")	1.2(4')	1.5(5')	1.87(6')

ATTACHMENT AND BODY SIZE

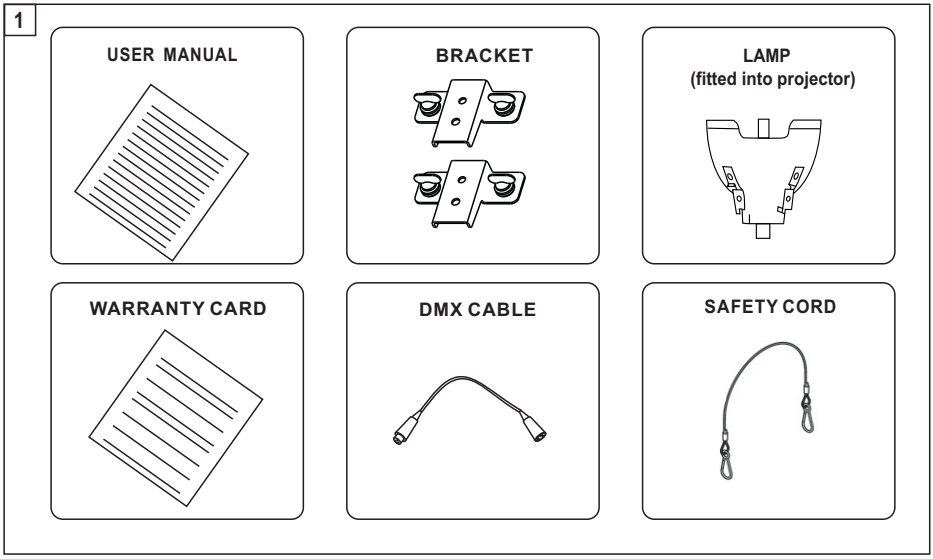

Attachment contents- Fig. 1

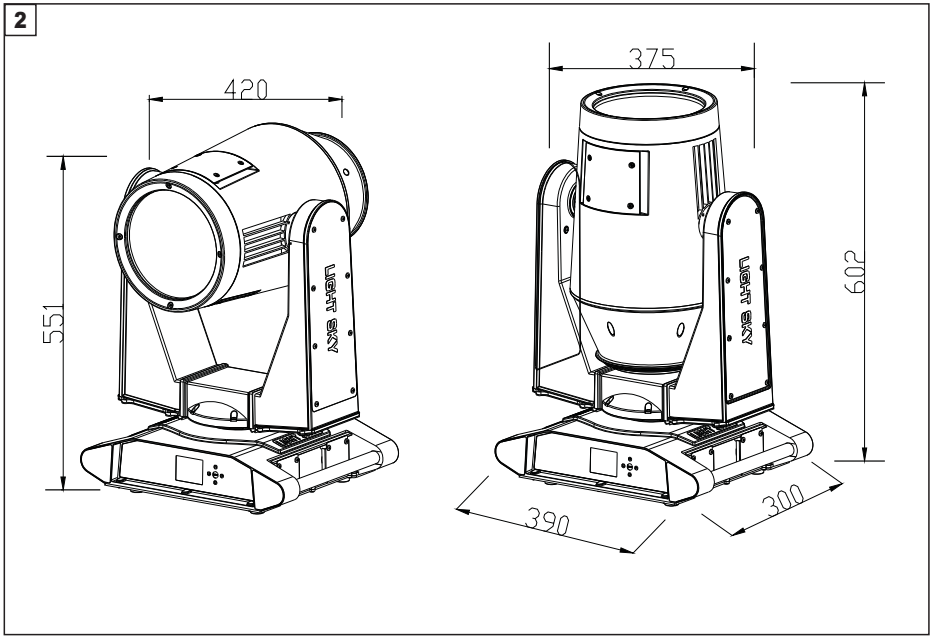

Body Size---Fig 2

INSTALLATION AND CONNECTING

3

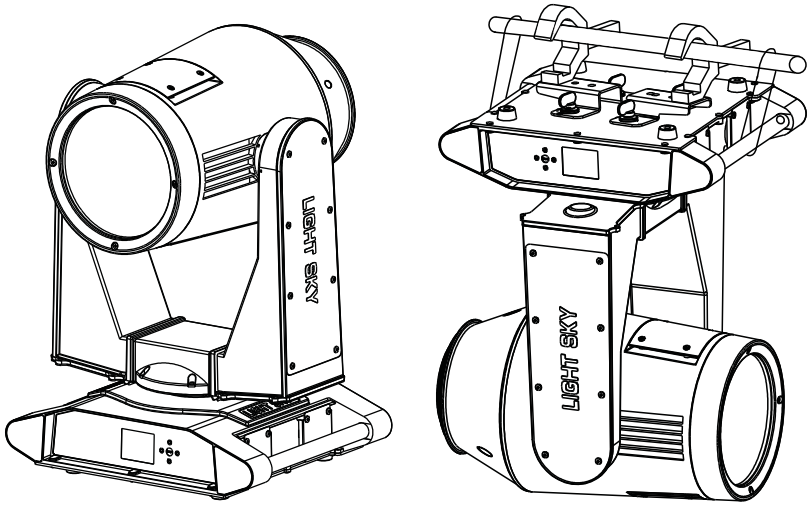

Installing the projector- Fig. 3
The projector can be installed on the floor resting on special rubber feet, on a truss or on the ceiling or wall.
WARNING:with the exception of when the projector is positioned on the floor, the safety cable must be fitted. This must be securely fixed to the support structure of the projector and then connected to the fixing point at the centre of the base.

4

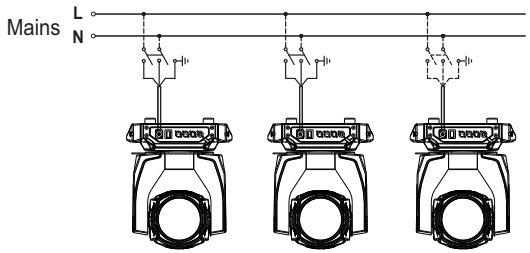

Connecting to the mains suppply ---Fig 4

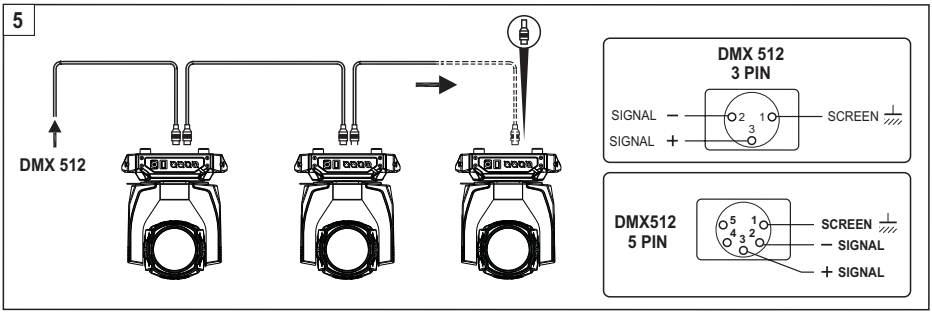

Connecting to the control signal line (DMX) - Fig. 5

◎ Please use the round 3 or 5-pin XLR plugs &sockets offered by menu facture to connect the first projector's output to the second projector' input and connect the second projector's output to the third projector's input. And in the same way for the rest,eventually connect the last projector's output,all the projectors are together.

◎The projectors's control signal output or input by using the 3 or 5-pin XLR pug and socket.If need to lengthen the communication cable,please make sure the both side of 3 or 5-pin plug is one to one . (one to one,two to two,three to three).Otherwise,the communication cable will be interrupted.The communicate cable is 2-cord screened cable 75Ω resistance with each core is at least a 0.5mm diameter.(**Caution:**All the inside leading wire of 3 or 5-pin XLR plug couldn't touch each other or plinth).

◎Recommend to use the DMX signal terminator for the installation to avoid the electronic noise dama -ge the digital control signal.Simply speaking,DMX terminator is an XLR connector with a 120Ω 1/2W resistor connected across pin 2 and 3.Which is then plugged into the output socket on the last projec -tor in the chain.Refer to the connection.

CONTROL PANEL

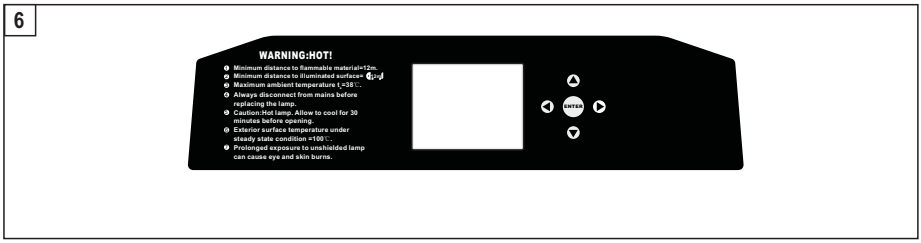

Press the switch. The projector starts resetting the effects. At the same time, the following information scrolls on the display:

UP ARROWHEAD:Page up or increase;
DOWN ARROWHEAD:Page down or reduce;
ENTER:OK Function
Exit:In the choice screen

MENU SETTING(V1.0)

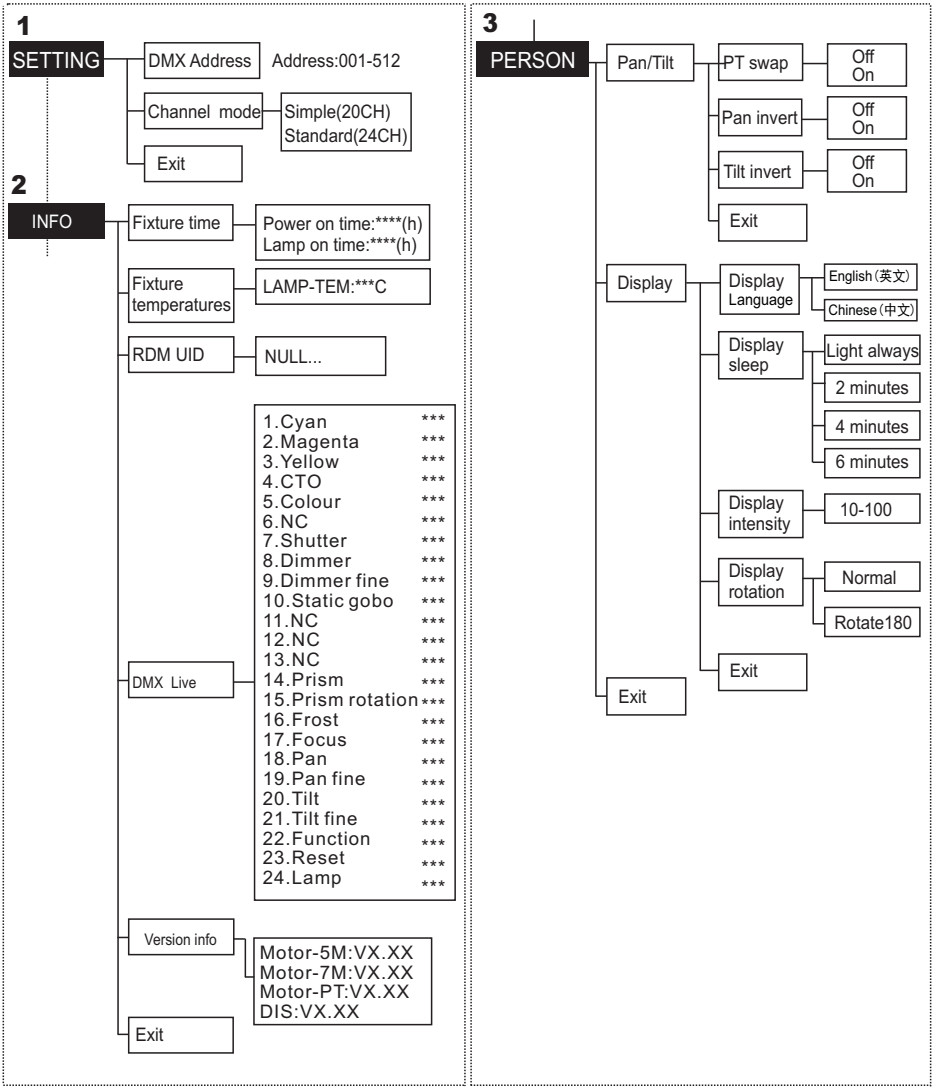

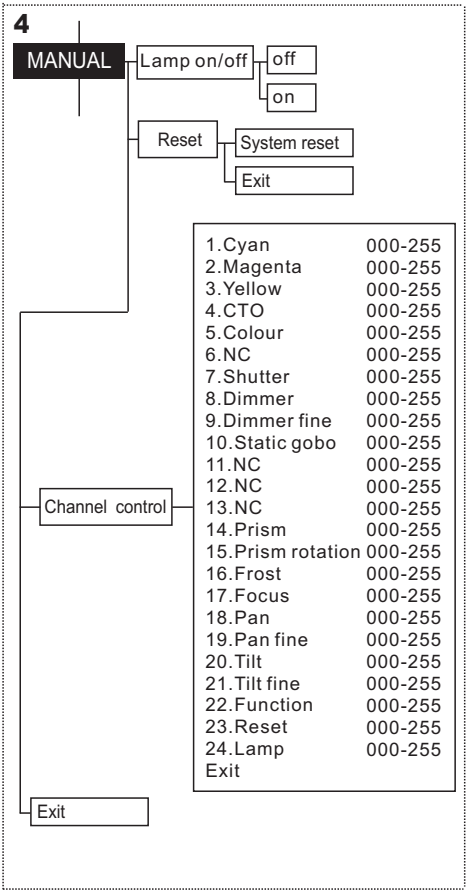
4
MANUAL
Lamp on/off
off
on
Reset
System reset
Exit
1.Cyan 000-255
2.Magenta 000-255
3.Yellow 000-255
4.CTO 000-255
5.Colour 000-255
6.NC 000-255
7.Shutter 000-255
8.Dimmer 000-255
9.Dimmer fine 000-255
10.Static gobo 000-255
11.NC 000-255
12.NC 000-255
13.NC 000-255
14.Prism 000-255
15.Prism rotation 000-255
16.Frost 000-255
17.Focus 000-255
18.Pan 000-255
19.Pan fine 000-255
20.Tilt 000-255
21.Tilt fine 000-255
22.Function 000-255
23.Reset 000-255
24.Lamp 000-255
Exit
Channel control
Exit

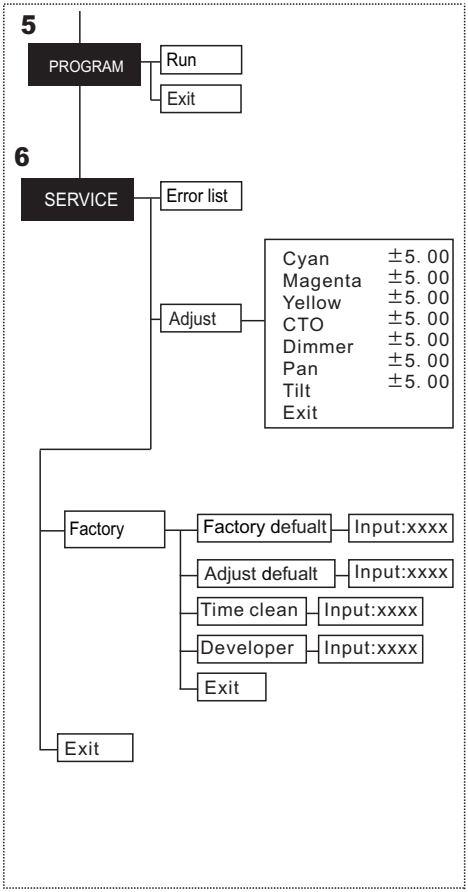
5
PROGRAM
Run
Exit
6
SERVICE
Error list
Adjust
Cyan ±5. 00
Magenta ±5. 00
Yellow ±5. 00
CTO ±5. 00
Dimmer ±5. 00
Pan ±5. 00
Tilt ±5. 00
Exit
Factory
Factory defualt
Input:xxxx
Adjust defualt
Input:xxxx
Time clean
Input:xxxx
Developer
Input:xxxx
Exit
Exit

CHANNEL FUNCTION

CHANNEL

CHANNEL		FUNCTION
20CH	24CH	
1	1	Cyan
2	2	Magenta
3	3	Yellow
4	4	CTO
5	5	Colour
–	6	–
6	7	Shutter
7	8	Dimmer
8	9	Dimmer fine
9	10	Static gobo
–	11	–
–	12	–
–	13	–
10	14	Prism
11	15	Prism rotation
12	16	Frost
13	17	Focus
14	18	Pan
15	19	Pan fine
16	20	Tilt
17	21	Tilt fine
18	22	Function
19	23	Reset
20	24	Lamp

20CH	24CH	DMX Value	Percent	Function
1	1			**Cyan**
		0-255	0-100	Cyan(0-white,255-full cyan)
				When the 18 channel /22 channel value in 63-75
		0-127	0–49	Cyan(0-white,127-full cyan)
		128-191	50–74	Pink
		192-255	75–100	Yellow
2	2			**Magenta**
		0-255	0-100	Magenta(0-white,255-full magenta)
				When the 18 channel /22 channel value in 63-75
		0-127	0–49	Magenta(0-white,127-full magenta)
		128-191	50–74	UV
		192-255	75–100	Blue
3	3			**Yellow**
		0-255	0-100	Yellow(0-white,255-full yellow)
				When the 18 channel /22 channel value in 63-75
		0-127	0–49	Yellow(0-white,127-full yellow)
		128-191	50–74	Dark green
		192-255	75–100	Jacinth
4	4			**CTO filter**
		0-255	0-100	0-7800K, 255-3200K
				When the 18 channel /22 channel value in 63-75
		0-127	0–49	0–7800K, 255–3200K
		128-191	50–74	CTB8000K
		192-255	75–100	Dark red
5	5			**COLOUR**
		0-31	0-12	white
		32-59	13-23	Yellow
		60-87	24-34	Pink
		88-115	35-45	Blue
		116-143	46-56	UV
		144-171	57-67	Jacinth
		172-199	68-78	Dark green
		200-227	79-89	Dark red
		228-255	90-100	CTB8000K
—	6			—

20CH	24CH	DMX Value	Percent	Function
6	7			**Stopper/Strobe**
		0-3	0-1	Light off
		4-103	2-40	Strobe,slow → fast
		104-107	41-42	Light on
		108-207	43-81	Pulsation Strobe,slow → fast
		208-212	82-79	Light on
		213-225	80-88	Random Strobe at low frequency
		226-238	89-93	Random Strobe at medium frequency
		239-251	94-98	Random Strobe at high frequency
		252-255	99-100	Light on
7	8			**Dimmer**
		0-255	0-100	Dimmer intensity from 0% to 100%
8	9			Dimmer fine
		0-255	0-100	Fine dimmer positioning
9	10			**Static gobo change**
		0-5	0-2	White
		6-11	3-4	Gobo1
		12-17	5-6	Gobo2
		18-23	7-9	Gobo3
		24-29	10-11	Gobo4
		30-35	12-13	Gobo5
		36-41	14-16	Gobo6
		42-47	17-18	Gobo7
		48-53	19-20	Gobo8
		54-59	21-23	Gobo9
		60-65	24-25	Gobo10
		66-71	26-28	Gobo11
		72-77	29-30	Gobo12
		78-118	31-46	Fast-slow rotation
		119-137	47-54	Stop
		138-178	55-69	Slow-fast rotation
		179-185	70-72	Gobo2 shake slow-fast speed
		186-192	73-75	Gobo3 shake slow-fast speed
		193-199	76-78	Gobo4 shake slow-fast speed
		200-206	79-80	Gobo5 shake slow-fast speed
		207-213	81-83	Gobo6 shake slow-fast speed
		214-220	84-86	Gobo7 shake slow-fast speed
		221-227	87-89	Gobo8 shake slow-fast speed
		228-234	90-92	Gobo9 shake slow-fast speed
		235-241	93-94	Gobo10 shake slow-fast speed
		242-248	95-97	Gobo11 shake slow-fast speed
		249-255	98-100	Gobo12 shake slow-fast speed

20CH	24CH	DMX Value	Percent	Function
—	11			—
—	12			—
—	13			—
10	14	0-5 6-128 129-255	0-2 3-50 51-100	**Prism insertion** No prism 3−prism 8−prism
11	15	0-21 21-42 42-63 63-84 84-105 105-127 128-190 191-192 193-255	0-8 8-16 16-24 24-32 32-41 41-50 50-74 74-75 76-100	Prism rotation Prism indexing: 0° to 90° range Prism indexing: 90° to 180° range Prism indexing: 180° to 270° range Prism indexing: 270° to 360° range Prism indexing: 360° to 450° range Prism indexing: 450° to 540° range Prism rotation,fast→ slow Stop rotation Prism rotation, slow→fast
12	16	0-255	0-100	Frost No frost→full frost
13	17	0-255	0-100	Focus Infinity→near
14	18	0-255	0-100	Pan Pan movement/positioning from 0°to 540°
15	19	0-255	0-100	Fine pan Fine Pan positioning
16	20	0-255	0-100	Tilt Tilt movement/positioning from 0°to 250 °
17	21	0-255	0-100	Fine tilt Fine Tilt positioning

20CH	24CH	DMX Value	Percent	Function
18	22			Function
		0-11	0-4	Unused range
		12-24	5-9	Fast pan / tilt speed (default)
		25-37	10-14	Normal pan / tilt speed
		38-50	15-19	Conventional dimmer curve
		51-62	20-24	Linear dimmer curve (default)
		63-75	25-29	CMY full range (default)
		76-87	30-34	CMY limited range
		88-101	35-39	CMY shortcut on (default)
		102-114	40-44	CMY shortcut off
		115-255	45-100	Unused range
19	23			Reset
		0-25	0-9	Unused range
		26-76	10-29	Focus Reset
		77-127	30-50	Pan / Tilt Reset
		128-255	51-100	Complete Reset
20	24			Lamp control
		0-25	0-9	Unused range
		26-100	10-39	Lamp off
		101-255	40-100	Lamp on

Circuit connecting diagram

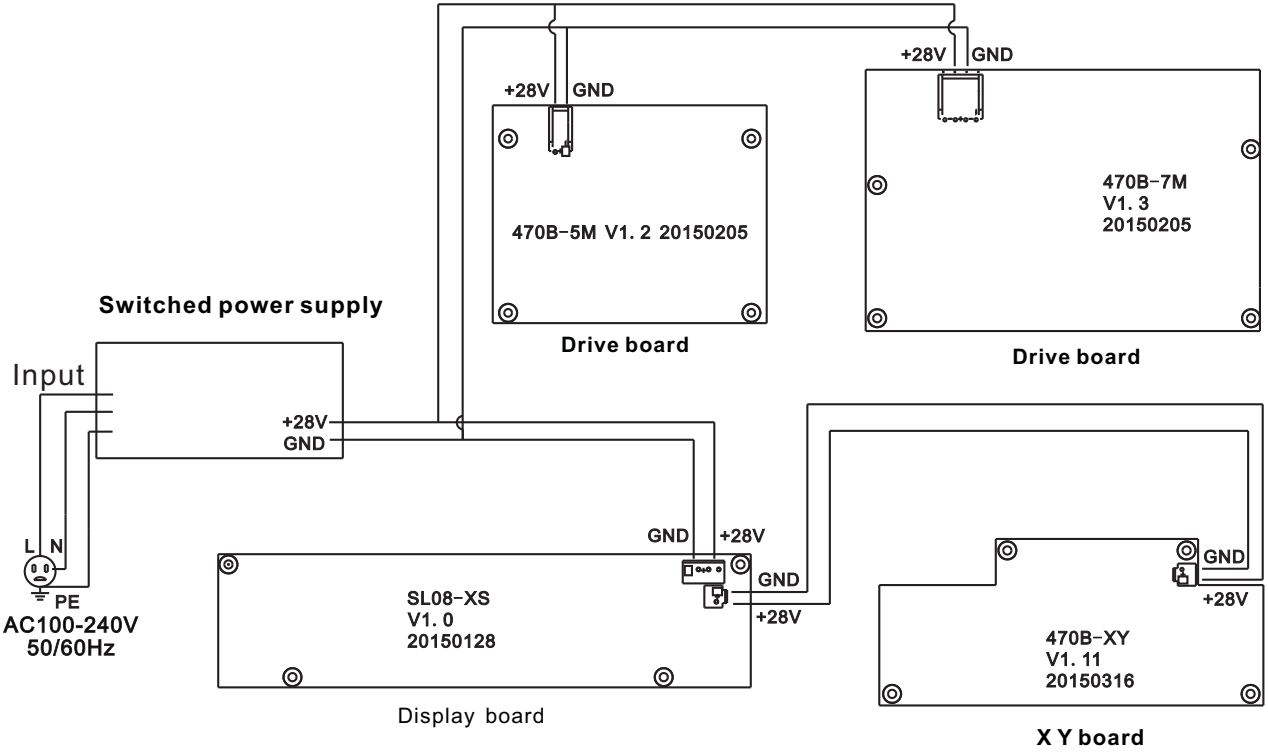

CLEANING AND MAINTENANCES

- In order to ensure the projector could work normally.It should be kept clean always .It is recommended that the fans and ventilation in let should be cleaned every 15 days.The lens and dichroic colour filters should also be reg -ularly cleaned to maintain an optimum light output.Do not use any type of solvent on dichroic colour filters.It will damage the projector.
- Suggestion:The continue usage of the light don't exceed 4 hours.Or it will shorter the usage of the lamp.Please use the alternative operation to solve this problems.
- Please disconnect the power supply when begin to maintenaceor takedown the light.Please let the parts cool down 10 minute at least then begin to install.If need to replace the lamp,please wait 10 minute again at least to let the lamp cool down completely or which maybe burned down.
- Please inspect the lens or other moving parts timing and keep them clear and static.If find anything damaged or losseness,must change a lamp or fix the lamp in order to avoid the accident.
- The light use the strong cool system. It is easy for the dirty to be collected .Please do clear the hot-sak one time two week at least.
- After you use the light,please check the intake place whether there are some wastepaper,please clean it up,or the windmill will break down and causing fire.

TROUBESHOOTING

It is recommended some solution for some normal trouble shooting.Any unsolutioned problems should always be handle by the professional person.Disconnect the power supply before maintenance the light.

■ **Lamp off**:

- Please check if install the suitable lamp.
- Please check the connection of the power supply or switch is ok.
- Please check whether the lamp will reach the end of their life can explode ,please replace a same description lamp.
- Please measure if the power supply is enough.
- Please check if the operation is correct.Please wait 30 minutes at least till the lamp cool down enough,then could the connect the power supply,which could be normal work.
- Please check whether the DMX 512 controller pass the "turn on" order.
- Please check the connection of the trigger circuit is loose contact.
- Please check whether the connected point of the trigger point is loose contact ,faster the connect cable .
- Please check if the switch of the temperature is damaged.
- Check the bottom box driver board "WK" socket if the resistance 0 between the two line.

■ **The light beam is dark,not inhomogeneou:**

- When the lamp is to the usage life,the light is not enough,please change a new one for the same description .
- Please check the reflector parts is dirty.Keep them clear.
- Please measure if the power supply is enough.
- Small adjusting is suitable for change height or screw system till get a ideal light beam.

■The light shadow is fogging:

◎Please check the data on the DMX 512 controller is suitable for the electric focus.

◎Please check the machenical parts is jamging.After cleaning,please add some temperature -durable juice.

■The light works interruptly:

◎Please check if the fan works normally or mote clogging.

◎Please check whether the abstract heat have the mote clogging.

◎Please check if the lamp is to the usage life.

◎Please check if the power supply is enough,the connection of the power supply or the circuit are good.

◎Please check if the switch of the sup-temperature is good.

■Though the light is lighting,but it couldn't accept the control order:

◎Please check the start code address and the function option are correct.

◎Please check whether the communicate control cable is ongood connection or the cable is too long or interrupt.

◎Please check the control system is not valid,check the singal amplifier of chain connected is valid.

◎Please check whether the communicate cable is too long or the other equipment is mutually conjugate.

◎Please arrange the wire well ,,Shorter the signal cable ,put the high voltage cable and low voltage cable separ -ately .

◎Add the signal amplify isolator.

◎Signal cable is used the excellent screening doublet (Resistance 75 Ω)

◎The end of the light end and the end resistance.

◎When the lamp don't cool down enough but do the incorrect operation will let the trigger up to super- high voltage leak.It will damage the electric circuit and communicate IC or CPU .Under this condition,please change the PCB board.

■the light can't move:

◎Please check if the power supply is suitable for the light voltage data.

◎Please check the fuse of input voltage is defective.

◎Please check the light if they are deformating,inside parts is broken,become wet...etc will lead the loose contact.

◎Please check if the inside lead wire and the connector is loose.

◎Please check the electric parts (such as the switch,transformer,ballast,electric capacity,piezoresistor, filter, PCB board,controller to motor) is short-circuit or burn down.

■Part of the projector couldn't be responsled to the controlling order:

◎Please check the order is correct to the moving.

◎Please check the mechanicalpart is deformation or loose.

◎Please check the function to the motor socket is loose or drive chip is burn down.

◎Please check the wire of the motor is cut at zig point.

◎Please check these function to the motor is damaged.

■On working,the pan &tilt couldn't work normally:

◎Please check according to the above step by step.

◎Please check the belt of the X.Y is broken.

◎Please check the X/Y direction data to the receiver is damage.

◎Re-projector reset.

DUTY EXONERATIVE AND COPYRIGHT PROTECTION

◇The lamp belongs to consumption products that is not guarantee to keep it in good repair.

◇Any products broken that didn't according to the instruction is not guarantee to keep it in good repair.

◇The commentary for all the instruction belongs to the supplier in final.

◇No authorize can't copy.

◇The information in this manual may be changed in the future,the company reserve the right to change the data without any advise.

LIGHT SKY®

FLY DRAGON LIGHTING EQUIPMENT CO.,LTD

Tel:0086-20-61828288

Web:www.lightsky.com.cn

www.tourprolighting.com

E-mail:sales@shsglobal.com

Add:No.51Yunfeng Rd,Xinhua Industrial Zone,Huadu District,

Guangzhou City,China.

Distributed by

SHS GLOBAL